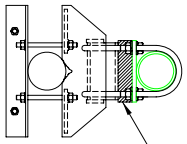

Spacers (When Required) Are To Be Located Between Pipe Attachment Plate And Pipe Mount Clamp. This Will Be Required On Sloped Legs Only And Will Be Placed On The Upper Clamping Assembly.

Spacer Information Table

Req'd Space	Face Change Per 20' In Height	Angle Range / Slope Of Leg	Req'd Spacers
3/8"	3" - 6"	.447° - .716°	3/8"
5/8"	6" - 9"	.716° - 1.19°	5/8"
1"	9" - 1' 3"	1.19° - 1.909°	1"
1-1/2"	1' 3" - 1' 9"	1.79° - 2.86°	1/2" , & 1"
2-1/2'	1' 9" - 3'	2.86° - 4.97°	3/8" , 1/2" , 5/8" , & 1"

Note : The Above Table Is to Aid In Installation And Provide Guidence On Spacer Requirements. These Spacers Are To Be Used On Sloped Legs Only. When Spacers Are Required, They Will Only Be Placed In The Upper Clamp Assembly. The Upper Clamp Assembly Should Be Adjusted Between 30" To 48" From The Lower Clamp Assembly To Accomodate For Exact Leg Taper To Bring Pipe Into A Vertical Plane.

STEEL PARTS

ITEM NO.	PART NO.	DESCRIPTION	QTY.
1	UM018	Universal Pipe Mount Clamp	2
2	UM019	Universal Backing Angle	4
3	UM020	Pipe Attachment Plate	2
4	MP4040X063	4" Sch 40 Pipe x 63" Long	1
5	SPL037-0607-01	3/8" Spacer Plate	1
6	SPL050-0607-01	1/2" Spacer Plate	1
7	SPL062-0607-01	5/8" Spacer Plate	1
8	SPL100-0607-01	1" Spacer Plate	1

HARDWARE

ITEM NO.	PART NO.	DESCRIPTION	QTY.
1	TRG2X1400G	5/8" x 14" H.D.G. Threaded Rod	8
2	UBG2X425X750	5/8" x 4-1/4" c-c x 7-1/2" isl H.D.G. U-Bolts 4" Thd.	4
3	UBG2X525	5/8" x 5-1/4" c-c x 6-3/4" isl H.D.G. U-Bolts	4
4	TRG2X1000G	5/8" x 10" H.D.G. Threaded Rod	8
5	BTG2X150	5/8" x 1-1/2" H.D.G. Bolts	4
6	NUG2G	5/8" H.D.G. Nuts	44
7	WLG2G	5/8" H.D.G. Lockwashers	44

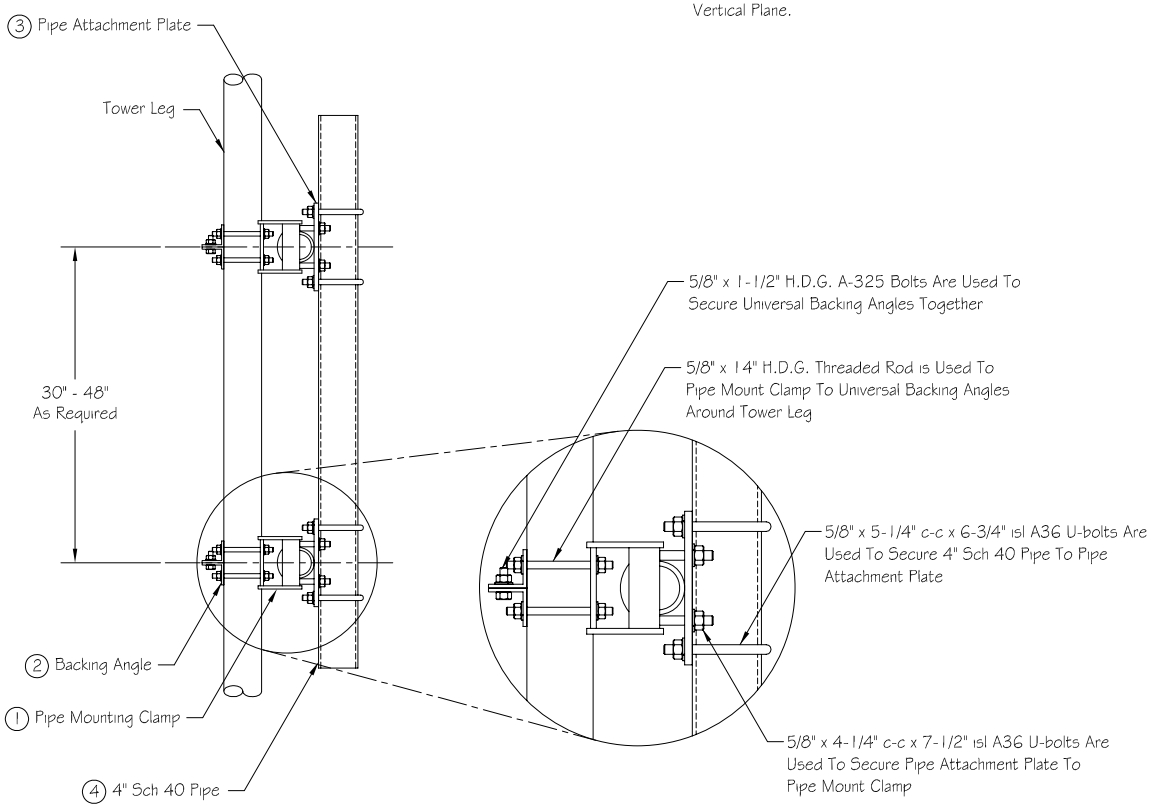

WEIGHT & ENGINEERING INFORMATION

KIT NO.	WEIGHT (lbs.)	DESCRIPTION	CaAc (Sq. Ft.)
KVPO-5D30-48-01	205	Universal Pipe Mount	2.60

KIT USE INFORMATION

1.) This Kit Is Designed To Adapt To The Following Member Ranges.
   A.) 2" x 2" Thru 11" x 11" 60° Angle.
   B.) 2" x 2" Thru 8" x 8" 90° Angle.
   C.) 1-1/2" Ø Thru 10-3/4" Ø Round Members.

2.) This Mounting Assembly Provides A 4-1/2" Ø Vertical Mounting Pipe To Adapt Antenna Mounts To Tapered Tower Sections, Angle Leg Towers, And Large Round Leg Towers.

3.) 5/8" x 10" Thd Rod Is Provided To Minimize Installing Where 14" Thd. Rod Is Not Required On Smaller Tower Members.

4.) Extra 5/8" Ø Nuts Are Provided For Ease Of Installation So That You Can Double Nut Thd Rod To Prevent Thd Rod From Spinning During Installation.

5.) Steel Parts Indicated Above With An "*" Will Be Packed With The Hardware.

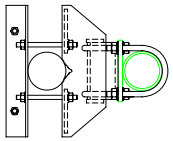

REV. #	DESCRIPTION	DATE	APP.	DRAWN J.J.B.	DATE 3-27-02
				CHECK	DATE
				APPROVAL	DATE

THIRD ANGLE PROJECTION

COMPANY CONFIDENTIAL. INFORMATION CONTAINED HEREIN IS CONFIDENTIAL. IT IS TO BE USED SOLELY FOR THE PURPOSE PROVIDED, AND IT IS NOT TO BE DISCLOSED TO OTHERS WITHOUT THE PRIOR WRITTEN CONSENT OF TOWER INNOVATIONS

TOLERANCES
.X± 3/32" ANGLES± 2°
.XX± 3/32" DRILLED HOLE± ø1/32"
.XXX± 1/16" BURNED HOLE± ø1/16"

UNLESS OTHERWISE SPECIFIED DIMENSIONS ARE IN: INCHES

Tower Innovations
PH# (812) 853-0595
FAX# (812) 853-6652
2855 HIGHWAY 261
NEWBURGH, IN. 47630

TITLE
UNIVERSAL PIPE MOUNT (0° - 5°)

DWG NO. KVPO-5D30-48-01 REV –

DO NOT SCALE DRAWING